8112159

SUP'AIR Fresh White

PRODUCT ADVANTAGES

- Does not mask but neutralizes unpleasant smells
- No consumables
- Removes the use of synthetic perfume

10 YEARS REPAIRABLE

MADE IN FRANCE

The hand dryer that neutralises unpleasant smells.

8112159

SUP'AIR Fresh White

SPECIFICATIONS

Material	ABS
Colour	White
Drying time (s)	10-15s
Sound level (dB) (1m in front of the appliance)	75
Outlet air speed (m/s)	90
Air flow rate (m^3/h)	130
Air outlet temperature (°C)	40
Safety in case of malfunction	Yes
Filter	No
Vandal-safe	Yes
Drying zone lighting	Yes

ELECTRICAL

Rated Power (W)	600
Voltage	220-240V
Frequency (Hz)	50
Standby power consumption (W)	2.2000
Detection type	Infrared
Motor speed (rpm)	24000
Type of motor	Brushed AC
Motor lifetime (number of operations)	350000

DIMENSIONS

Height (mm)	292
Width (mm)	215
Depth (mm)	193
Weight (kg)	3.7000

BOX DIMENSIONS

Height (mm)	295
Width (mm)	240
Depth (mm)	205
Weight (kg)	3.7300

TECHNICAL DRAWING

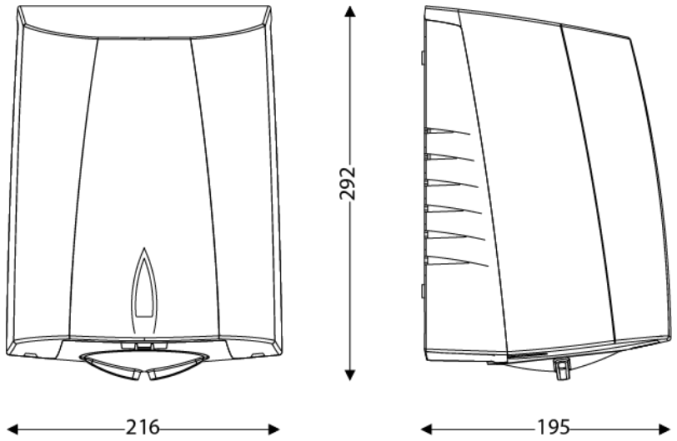

RECOMMENDED INSTALLATION HEIGHTS

- Men installation height (cm) : 130
- Women installation height (cm) : 125
- Children installation height (cm) : 120
- Disabled person installation height (cm) : 100